Dimension flange mount B5 and V1

Frame size	AC	AD	AD'	AG	D	DH	E	ED	F	G	GD	KK	L	LA	LG	M	N	P	S	T
80M	175	150	140	51	19	M6x16	440	25	6	15.5	6	M25x1.5	295	12	106	165	130	200	12	3.5
90S	190	165	150	60	24	M8x19	50	40	8	20	7	M25x1.5	320	12	124	165	130	200	12	3.5
90L	190	165	150	60	24	M8x19	50	40	8	20	7	M25x1.5	345	12	124	165	130	200	12	3.5
100L	215	170	160	60	28	M10x22	60	45	8	24	7	M25x1.5	385	14	140	215	180	250	14.5	4
112M	236	195	185	75	28	M10x22	60	45	8	24	7	M32x1.5	410	14	145	215	180	250	14.5	4
132S	275	215	205	75	38	M12x28	80	63	10	33	8	M32x1.5	480	14	169	265	230	300	14.5	4
132M	275	215	205	75	38	M12x28	80	63	10	33	8	M32x1.5	520	14	169	265	230	300	14.5	4
160M	330	265	250	95	42	M16x36	110	90	12	37	8	M40x1.5	610	15	270	300	250	350	18.5	5
160L	330	265	250	95	42	M16x36	110	90	12	37	8	M40x1.5	655	15	270	300	250	350	18.5	5
180M	380	280	270	95	48	M16x36	110	90	14	42.5	9	M40x1.5	680	15	277	300	250	350	18.5	5
180L	380	280	270	95	48	M20x42	110	90	14	42.5	9	M40x1.5	720	15	277	300	250	350	18.5	5
200L	420	315	325	120	55	M20x42	110	90	16	49	10	M50x1.5	760	17	300	350	300	400	18.5	5
225S(4-8P)	465	335	335	120	60	M20x42	140	110	18	53	11	M50x1.5	825	20	340	400	350	450	18.5	5
225M(2P)	465	335	335	120	55	M20x42	110	90	16	49	10	M50x1.5	820	20	310	400	350	450	18.5	5
225M(4-8P)	465	335	335	120	60	M20x42	140	110	18	53	11	M50x1.5	850	20	340	400	350	450	18.5	5
250M(2P)	520	375	370	160	60	M20x42	140	110	18	53	11	M63x1.5	925	20	353	500	450	550	18.5	5
250M1(4-8P)	520	375	370	160	65	M20x42	140	110	18	58	11	M63x1.5	925	20	353	500	450	550	18.5	5
250M2(4P)	520	375	370	160	70	M20x42	140	110	20	62.5	12	M63x1.5	925	20	353	500	450	550	18.5	5
280S(2P)	570	405	400	160	65	M20x42	140	110	18	58	11	M63x1.5	960	22	350	500	450	550	18.5	5
280S(4-8P)	570	405	400	160	75	M20x42	140	110	20	67.5	12	M63x1.5	975	22	350	500	450	550	18.5	5
280M(2P)	570	405	400	160	65	M20x42	140	110	18	58	11	M63x1.5	1000	22	350	500	450	550	18.5	5
280M1(4-8P)	570	405	400	160	75	M20x42	140	110	20	67.5	12	M63x1.5	1015	22	350	500	450	550	18.5	5
280M2(4P)	570	405	400	160	80	M20x42	170	140	22	71	14	M63x1.5	1060	22	450	550	450	550	18.5	5
315S(2P)	650	500	495	195	65	M20x42	140	110	18	58	11	M63x1.5	1160	24	387	600	550	660	24	6
315M(2P)	650	500	495	195	65	M20x42	140	110	18	58	11	M63x1.5	1270	24	387	600	550	660	24	6
315L(2P)	650	500	495	195	65	M20x42	140	110	18	58	11	M63x1.5	1270	24	387	600	550	660	24	6
315S(4-8P)	650	500	495	195	80	M20x42	170	140	22	71	14	M63x1.5	1190	24	417	600	550	660	24	6
315M(4-8P)	650	500	495	195	80	M20x42	170	140	22	71	14	M63x1.5	1300	24	417	600	550	660	24	6
315L(4-8P)	650	500	495	195	80	M20x42	170	140	22	71	14	M63x1.5	1300	24	417	600	550	660	24	6
355M(2P)V1	735	645	640	330	75	M24x50	140	110	20	67.5	12	M63x1.5	1500	25	420	740	680	800	24	6
355L(2P)V1	735	645	640	330	75	M24x50	140	110	20	67.5	12	M63x1.5	1500	25	420	740	680	800	24	6
355M(4-8P)V1	735	645	640	330	95	M24x50	170	140	25	86	14	M63x1.5	1530	25	450	740	680	800	24	6
*355M(4-8P)V1	735	645	640	330	100	M24x50	210	160	28	90	16	M63x1.5	1570	25	490	740	680	800	24	6
355L(4-8P)V1	735	645	640	330	95	M24x50	170	140	25	86	14	M63x1.5	1530	25	450	740	680	800	24	6
*355M(4-8P)V1	735	645	640	330	100	M24x50	210	160	28	90	16	M63x1.5	1570	25	490	740	680	800	24	6

The 'R' dimension is zero.

The motors of B5 are supplied only up to frame size 315

* These motors can also be supplied. Please state the dimensions of the shaft extension on order.

Squirrel-cage motors

Dimensions foot-flange mount B35

HASCON electric motor

HC-80~132

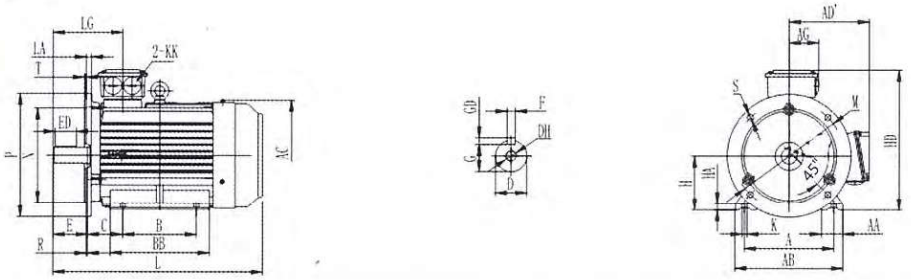

HC-160~200

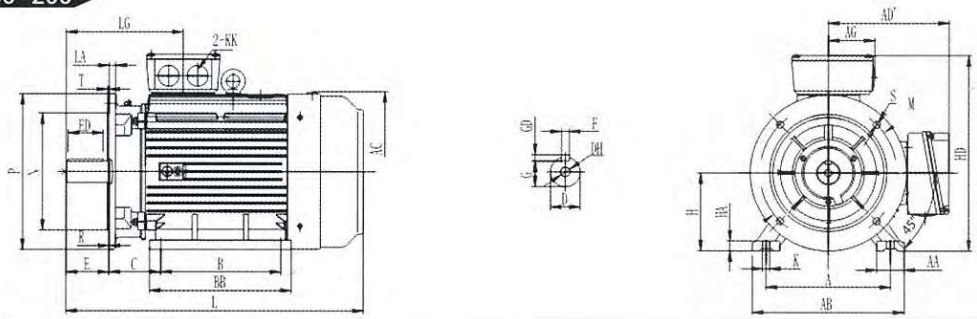

HC-225~280

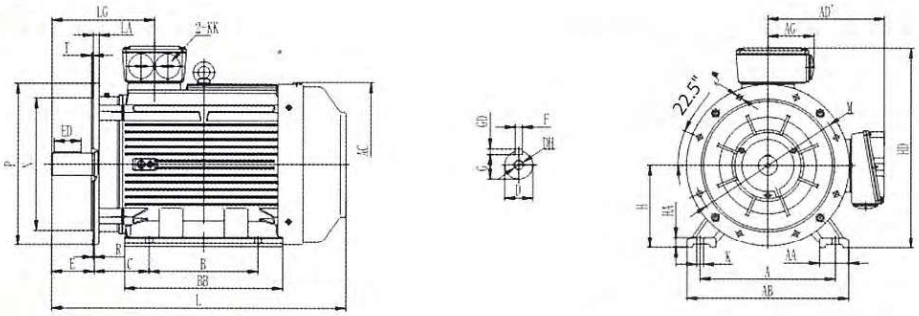

HC-315~355

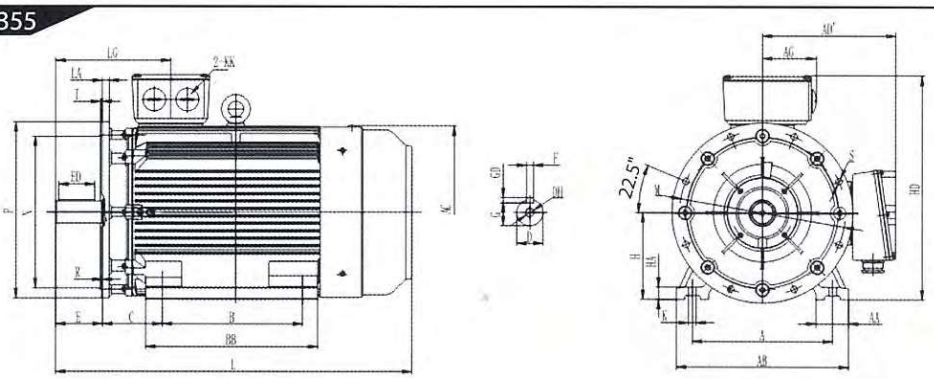

Dimensions foot-flange mount B35

Frame size	A	AA	AB	AC	AD	AG	B	BB	C	D	DH	E	ED	F	G	GD	H	HA	HD	K	KK	L	LG	LA	M	N	P	S	T
80M	125	34	160	175	140	51	100	130	50	19	M6x16	40	25	6	15.5	6	80	10	230	10	M25x1.5	295	106	12	165	130	200	12	3.5
90S	140	36	180	190	150	60	100	135	56	24	M8x19	50	40	8	20	7	90	13	260	10	M25x1.5	320	124	12	165	130	200	12	3.5
90L	140	36	180	190	150	60	125	160	56	24	M8x19	50	40	8	20	7	90	13	260	10	M25x1.5	345	124	12	165	130	200	12	3.5
100L	160	40	200	215	160	60	140	182	63	28	M10x22	60	45	8	24	7	100	14	275	12	M25x1.5	385	140	14	215	180	250	14.5	4
112M	190	45	230	236	185	75	140	195	70	28	M10x22	60	45	8	24	7	112	14	310	12	M32x1.5	410	145	14	215	180	250	14.5	4
132S	216	52	265	275	205	75	140	205	89	38	M12x28	80	63	10	33	8	132	16	350	12	M32x1.5	480	169	14	265	230	300	14.5	4
132M	216	52	265	275	205	75	178	245	89	38	M12x28	80	63	10	33	8	132	16	350	12	M32x1.5	520	169	14	265	230	300	14.5	4
160M	254	65	230	330	250	95	210	260	108	42	M16x36	110	90	12	37	8	160	19	425	14.5	M40x1.5	610	270	15	300	250	350	18.5	5
160L	254	65	320	330	350	95	254	305	108	42	M16x36	110	90	12	37	8	160	19	425	14.5	M40x1.5	655	270	15	300	250	350	18.5	5
180M	279	74	350	380	270	95	241	297	121	48	M16x36	110	90	14	42.5	9	180	22	460	14.5	M40x1.5	680	277	15	300	250	350	18.5	5
180L	279	74	350	380	270	95	279	327	121	48	M16x36	110	90	14	42.5	9	180	22	460	14.5	M40x1.5	720	277	15	300	250	350	18.5	5
200L	318	75	395	420	325	120	305	370	133	55	M20x42	110	90	16	49	10	200	25	515	18.5	M40x1.5	760	300	17	350	300	400	18.5	5
225S(4-8P)	356	75	436	465	335	120	286	355	149	60	M20x42	140	110	18	53	11	225	28	560	18.5	M50x1.5	825	340	20	400	350	450	18.5	5
225M(2P)	356	75	436	465	335	120	311	380	149	55	M20x42	110	90	16	49	10	225	28	560	18.5	M50x1.5	820	310	20	400	350	450	18.5	5
225M(4-8P)	356	75	436	465	335	120	311	380	149	60	M20x42	140	110	18	53	11	225	28	560	18.5	M50x1.5	850	340	20	400	350	450	18.5	5
250M(2P)	406	88	495	520	370	160	349	440	168	60	M20x42	140	110	18	53	11	250	33	620	24	M63x1.5	925	353	20	500	450	550	18.5	5
250M1(4-8P)	406	88	495	520	370	160	349	440	168	65	M20x42	140	110	18	58	11	250	33	620	24	M63x1.5	925	353	20	500	450	550	18.5	5
250M2(4P)	406	88	495	520	370	160	349	440	168	70	M20x42	140	110	20	62.5	12	280	33	620	24	M63x1.5	935	353	20	500	450	550	18.5	5
280S(2P)	457	103	550	570	400	160	368	495	190	65	M20x42	140	110	18	58	11	280	35	685	24	M63x1.5	960	350	22	500	450	550	18.5	5
280S(4-8P)	457	103	550	570	400	160	368	495	190	75	M20x42	140	110	20	67.5	12	280	35	685	24	M63x1.5	975	350	22	500	450	550	18.5	
280M(2P)	457	103	550	570	400	160	419	535	190	65	M20x42	140	110	18	58	11	280	35	685	24	M63x1.5	1000	350	22	500	450	550	18.5	5
280M1(4-8P)	457	103	550	570	400	160	419	535	190	75	M20x42	140	110	20	67.5	12	280	35	685	24	M63x1.5	1015	350	22	500	450	550	18.5	5
280M2(4-8P)	457	103	550	570	400	160	419	535	190	80	M20x42	170	140	22	71	14	280	35	685	24	M63x1.5	1160	380	22	500	450	550	18.5	5
315S(2P)	508	120	630	650	495	195	406	515	216	65	M20x42	140	110	18	58	11	315	45	820	28	M63x1.5	1060	387	24	600	550	660	24	6
315M(2P)	508	120	630	650	495	195	457	625	216	65	M20x42	140	110	18	58	11	315	45	820	28	M63x1.5	1270	387	24	600	550	660	24	6
315L(2P)	508	120	630	650	495	195	508	625	216	65	M20x42	140	110	18	58	11	315	45	820	28	M63x1.5	1270	387	24	600	550	660	24	6
315S(4-8P)	508	120	630	650	495	195	406	515	216	80	M20x42	170	140	22	71	14	315	45	820	28	M63x1.5	1190	417	24	600	550	660	24	6
315M(4-8P)	508	120	630	650	495	195	457	625	216	80	M20x42	170	140	22	71	14	315	45	820	28	M63x1.5	1300	417	24	600	550	660	24	6
315L(4-8P)	508	120	630	650	495	195	508	625	216	80	M20x42	170	140	22	71	14	315	45	820	28	M63x1.5	1300	417	24	600	550	660	24	6
355M(2P)	610	125	735	735	640	330	560	775	254	75	M24x50	140	110	20	67.5	12	355	49	1000	28	M63x1.5	1500	420	25	740	680	800	24	6
355L(2P)	610	125	735	735	640	330	630	775	254	75	M24x50	140	110	20	67.5	12	355	49	1000	28	M63x1.5	1500	420	25	740	680	800	24	6
355M(4-8P)	610	125	735	735	640	330	560	775	254	95	M24x50	170	140	25	86	14	355	49	1000	28	M63x1.5	1530	450	25	740	680	800	24	6
*355M(4-8P)	610	125	735	735	640	330	560	775	254	100	M24x50	210	160	28	90	16	355	49	1000	28	M63x1.5	1570	490	25	740	680	800	24	6
355L(4-8P)	610	125	735	735	640	330	630	775	254	95	M24x50	170	140	25	86	14	355	49	1000	28	M63x1.5	1530	450	25	740	680	800	24	6
*355L(4-8P)	610	125	735	735	640	330	630	775	254	100	M24x50	210	160	28	90	16	355	49	1000	28	M63x1.5	1570	490	25	740	680	800	24	6

The 'R' dimension is zero.

* These motors can also be supplied. Please state the dimensions of the shaft extension on order.

Squirrel-cage motors

Top terminal box

HASCON electric motor

HC-80~100

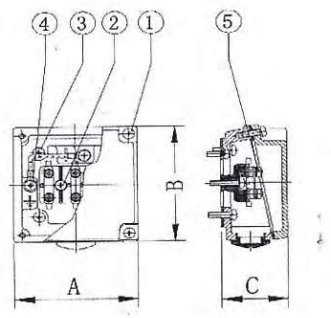

HC-112~132

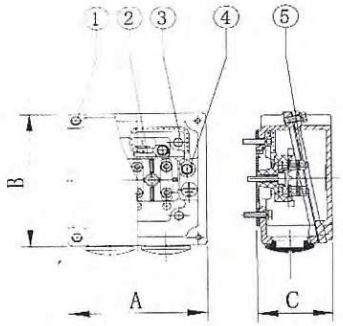

HC-160~225

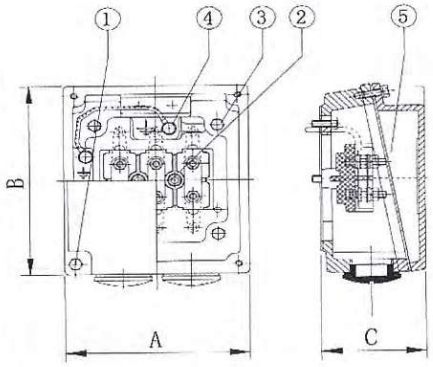

HC-250~315

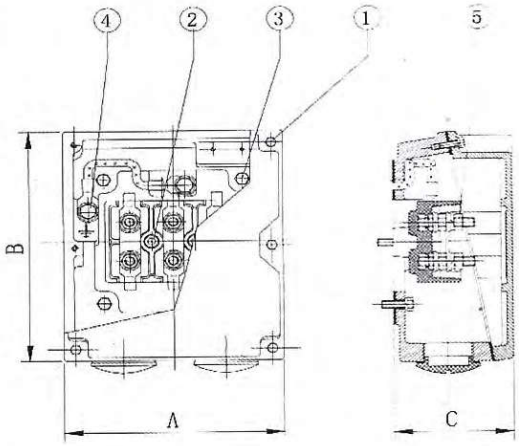

HC-355

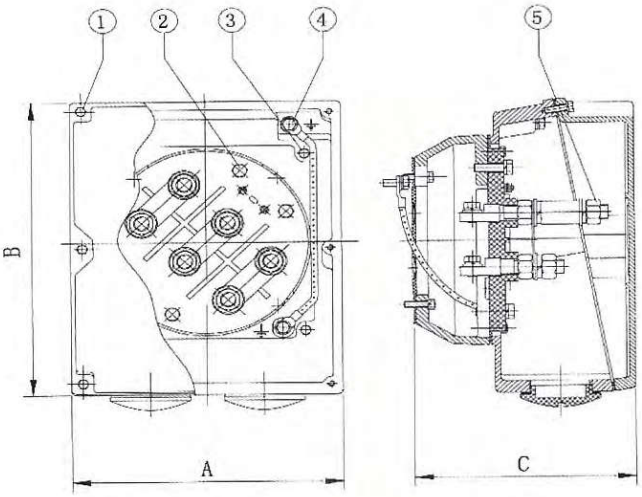

FRAME	A	B	C	1	2	3	4	5	METRIC GLAND SIZE	PG GLAND SIZE
HC-80	95	95	56	M5X16	M5X25	M5X16	M5X12	M4	M25X1.5	PG16
HC-90-100	105	109	56	M5X16	M5X25	M5X16	M5X12	M4	M25X1.5	PG16
HC-112-132	117	125	65	M5X16	M5X25	M5X20	M5X16	M5	2XM32X1.5	2XPG21
HC-160-180	155	177	87	M6X16	M6X25	M6X16	M6X12	M6	2XM40X1.5	2XPG29
HC-200-225	179	215	107	M6X25	M8X35	M8X20	M8X16	M8	2XM50X1.5	2XPG36
HC-250-280	217	261	120	M6X30	M8X35	M18X30	M10X20	M10	2XM63X1.5	2XPG42
HC-315	279	331	165	M8X35	M10X45	M10X30	M10X20	M12	2XM63X1.5	2XPG48
HC-355	334	410	278	M8X30	M12X80	M12X30	M10X25	M20	2XM63X1.5	2XPG48

Bearing data

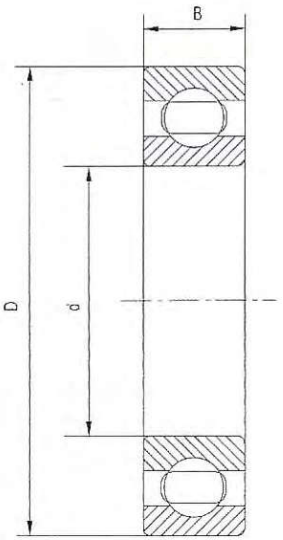

Frame	DE	NDE	d	D	B
HC-80	6204 ZZ C3	6204 ZZ C3	20	47	14
HC-90	6205 ZZ C3	6205 ZZ C3	25	52	15
HC-100	6206 ZZ C3	6206 ZZ C3	30	62	16
HC-112	6306 ZZ C3	6306 ZZ C3	30	72	19
HC-132	6308 ZZ C3	6308 ZZ C3	40	90	23
HC-160	6309 C3	6309 C3	45	100	25
HC-180	6311 C3	6311 C3	55	120	29
HC-200	6312 C3	6312 C3	60	130	31
HC-225	6313 C3	6313 C3	65	140	33
HC-250(Horizontal)	6314 C3	6314 C3	70	150	35
HC-250(Vertical)	6314 C3	7314	70	150	35
HC-280-2P(Horizontal)	6314 C3	6314 C3	70	150	35
HC-280-2P(Vertical)	6314 C3	7314	70	150	35
HC-280-4-8(Horizontal)	6317 C3	6317 C3	85	180	41
HC-280-4-8(Vertical)	6317 C3	7317	85	180	41
HC-315 2 P(Horizontal)	6316 C3	6316 C3	80	170	39
HC-315 2 P(Vertical)	6316 C3	7316	80	170	39
HC-315 4-8P(Horizontal)	N319	6319 C3	95	200	45
HC-315 4-8P(Vertical)	N319	7319	95	200	45
HC-355 2P(Horizontal)	6319 C3	6319 C3	95	200	45
HC-355 2P(Vertical)	6319 C3	7319	95	200	45
HC-355 4-8 P(Horizontal)	N322	6322 C3	110	240	50
HC-355 4-8 P(Vertical)	N322	7322	110	240	50

- HC motors are equipped with bearings from excellent manufacturers.
- In general the bearings have C3 clearances.
- Motors of frame sizes 80-132 are fitted with life-lubricated bearings.
- Motors of frame sizes 160-355 are fitted with open bearings and regreasing device. Depending on the useful life of grease, open bearings must be regreased in good time so that the scheduled bearing service life is reached.

Frame size	Drive end bearing	Non-drive end bearing	Reqreasing period hours for operating temperatures up to 70 C			Quantity of grease in bearing chamber
			<3600r/min	<1800r/min	<1200r/min	grams
HC-160	6309 C3	6309 C3	6000	12000	18000	13
HC-180	6311 C3	6311 C3	4000	11000	16000	15
HC-200	6312 C3	6312 C3	3500	8500	13000	20
HC-225	6313 C3	6313 C3	3000	6000	9000	22
HC-250	6314 C3	6314 C3	2000	5000	8000	23
HC-280 2P	6314 C3	6314 C3	1200	-	-	30
HC-280 4-8P	6317 C3	6317 C3	-	4000	6000	30
HC-315 2P	6316 C3	6316 C3	1200	-	-	30
HC-315 4-8P	N319	6319 C3	-	2000	3000	45
HC-355 2P	6319 C3	6319 C3	1200	-	-	30
HC-355 4-8P	N322	6322 C3	-	1400	2200	60

Notes:
1. Vertical motors should be greased twice as often as horizontal motors.
2. Regreasing time should be reduced if bearing operating temperature is in excess of 70°C

● HASCON reserves right to make changes to this brochure without notics.

HAL motors have good performance, safety and reliable operation, nice appearance and, can be maintained very conveniently, while with low noises, little vibration and at the same time of lightweight and simple construction. The compositive performance is good, the multiple of starting torque is 1.8~2.5.

These series motors are suitable for the occasion where the requirements of big starting torque and high over load, such as air-compressors, pumps, fans, medical apparatus and instruments, and many other small machines.

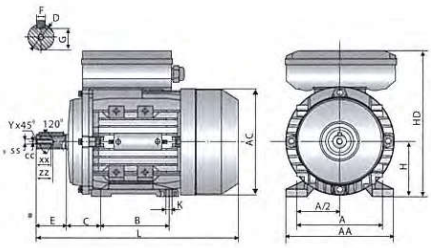

IMB3

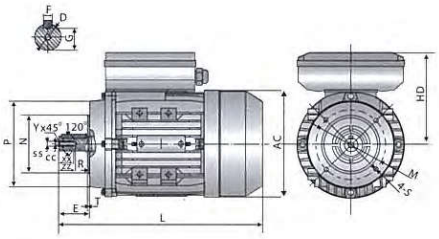

IMB14

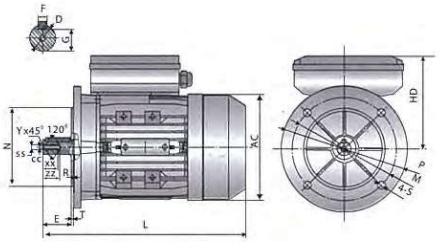

IMB5

Overall & Installation Dimensions

Frame Size	MOUNTING DIMENSIONS																					OVERALL DIMENSIONS					SHAFT END SCREW DIMENSIONS				
	IMB3									IMB14						IMB5															
	A	B	C	D	E	F	G	H	K	M	N	P	R	S	T	M	N	P	R	S	T	AA	AC	AD	HD	L	SS	XX	ZZ	CC	Y
63	100	80	40	11	23	4	8.5	63	7X10	75	60	90	0	M5	2.5	115	95	140	0	ϕ10	3.0	120	130	179	116	212	M4	10	15	3.3	0.8
71	112	90	45	14	30	5	11	71	7X10	85	70	105	0	M6	2.5	130	110	160	0	ϕ10	3.5	132	145	194	123	255	M5	12	18	4.2	0.8
80	125	100	50	19	40	6	15.5	80	10X13	100	80	120	0	M6	3.0	165	130	200	0	ϕ12	3.5	157	165	223	143	290	M6	16	22	5	1
90S	140	100	56	24	50	8	20	90	10X13	115	95	140	0	M8	3.0	165	130	200	0	ϕ12	3.5	172	185	240	150	335	M8	20	25	6.8	1
90L	140	125	56	24	50	8	20	90	10X13	115	95	140	0	M8	3.0	165	130	200	0	ϕ12	3.5	172	185	240	150	365	M8	20	25	6.8	1
100L	160	140	63	28	60	8	24	100	12X15	130	110	160	0	M8	3.5	215	180	250	0	ϕ15	4.0	196	205	260	160	445	M10	22	28	8.5	1.5
112M	190	140	70	28	60	8	24	112	12X15	130	110	160	0	M8	3.5	215	180	250	0	ϕ15	4.0	222	230	295	183	453	M10	22	28	8.5	1.5

TECHNICAL DATA @230V

Model	Power (kW)	Current (A)	Speed (r/min)	Eff. (%)	Power Factor	Rated Torque (N.M)	Tstart/Tn (Times)	Tmax/Tn (Times)	Starting Current (A)	Run Capactior (μ f/V)	Start Capacitor (μ f/V)	Noise dB(A)	W.t. (Kg)
HAL631-2	0.18	1.31	2750	65	0.92	0.63	2.5	1.7	8	8μ F/450V	40μ F/250V	70	4.2
HAL632-2	0.25	1.76	2760	67	0.92	0.87	2.5	1.7	10	10μ F/450V	50μ F/250V	73	4.7
HAL711-2	0.37	2.42	2780	70	0.95	1.27	2.5	1.7	15	12μ F/450V	75μ F/250V	75	5.3
HAL712-2	0.55	3.45	2790	73	0.95	1.88	2.5	1.7	20	16μ F/450V	100μ F/250V	76	7.4
HAL801-2	0.75	4.54	2800	74	0.97	2.59	2.5	1.7	30	20μ F/450V	100μ F/250V	76	9.5
HAL802-2	1.1	6.45	2810	76	0.97	3.74	2.5	1.7	40	25μ F/450V	150μ F/250V	79	11.2
HAL90S-2	1.5	8.62	2810	78	0.97	5.10	2.5	1.8	55	40μ F/450V	150μ F/250V	84	14
HAL90L-2	2.2	12.5	2810	79	0.97	7.48	2.2	1.8	75	50μ F/450V	250μ F/250V	84	17
HAL100L-2	3.0	16.6	2830	80	0.98	10.12	2.2	2.0	95	60μ F/450V	400μ F/300V	88	25
HAL112M-2	3.7	20.5	2850	80	0.98	12.40	2.0	2.0	120	60μ F/450V	500μ F/300V	90	30.5
HAL631-4	0.12	1.04	1350	55	0.91	0.85	2.5	1.6	6	10μ F/450V	40μ F/250V	64	4
HAL632-4	0.18	1.54	1360	56	0.91	1.26	2.5	1.6	8.5	12μ F/450V	40μ F/250V	64	4.8
HAL711-4	0.25	1.94	1380	61	0.92	1.73	2.5	1.6	10	14μ F/450V	50μ F/250V	66	5.9
HAL712-4	0.37	2.80	1380	62.5	0.92	2.56	2.5	1.5	15	16μ F/450V	75μ F/250V	68	6.9
HAL801-4	0.55	3.80	1400	67	0.94	3.75	2.5	1.7	20	20μ F/450V	100μ F/250V	71	9.6
HAL802-4	0.75	4.75	1410	73	0.94	5.08	2.5	1.7	30	25μ F/450V	150μ F/250V	71	10.8
HAL90S-4	1.1	6.76	1410	74.5	0.95	7.45	2.2	1.8	40	30μ F/450V	150μ F/250V	74	13.5
HAL90L-4	1.5	9.03	1420	76	0.95	10.09	2.2	1.8	55	40μ F/450V	200μ F/250V	79	16.5
HAL100L1-4	2.2	12.6	1430	78	0.97	14.69	2.2	1.8	75	50μ F/450V	300μ F/250V	79	24
HAL100L2-4	3	17.0	1440	79	0.97	19.90	2.2	1.8	95	60μ F/450V	400μ F/250V	83	30
HAL112M-4	3.7	20.7	1440	80	0.97	24.54	2.0	2.0	120	60μ F/450V	500μ F/250V	86	36